Vul onderstaande tabel in

7−segment decoder

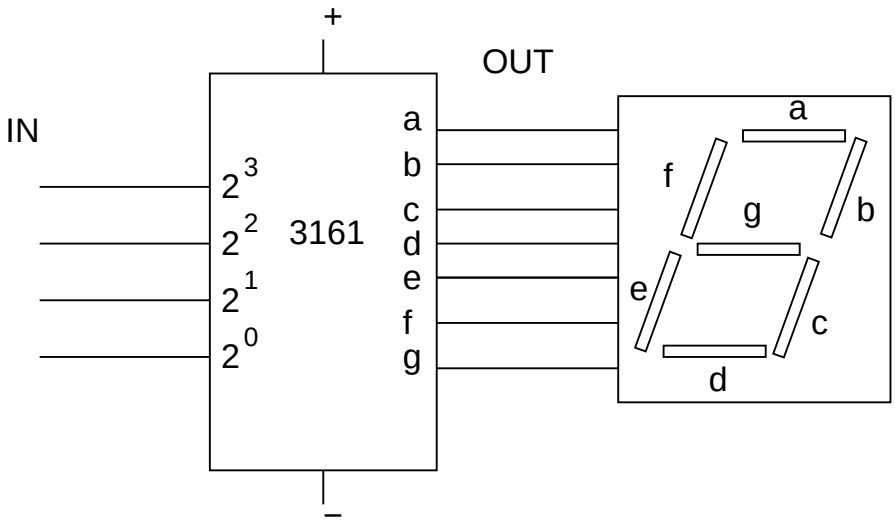

IN					OUT						
					a	b	c	d	e	f	g
0	0	0	0								